THIS DRAWING IS UNPUBLISHED. RELEASED FOR PUBLICATION - - -
© COPYRIGHT BY TYCO ELECTRONICS CORPORATION ALL RIGHTS RESERVED.

LOC	DIST
CM	00

REVISIONS

P	LTR	DESCRIPTION	DATE	DWN	APVD
	E	REVISED PER 0G3B-0792-04	25-FEB-05	SH	DB

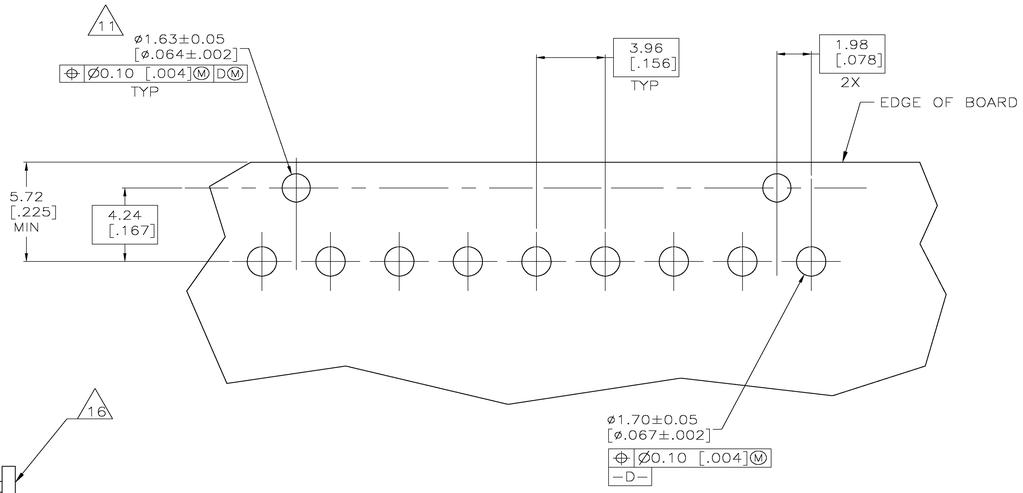

10 RECOMMENDED MOUNTING HOLE PATTERN FOR 1.57 [.062] THICK P.C. BOARD

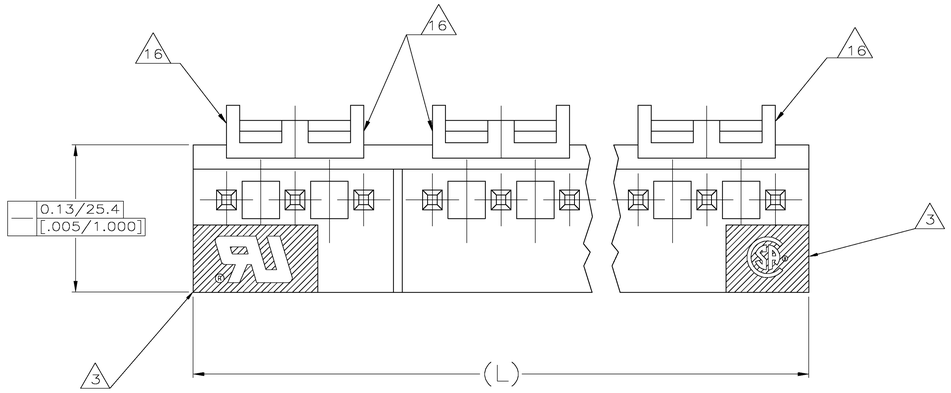

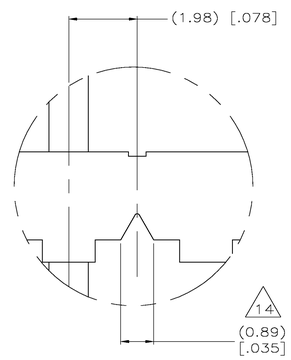

DETAIL C

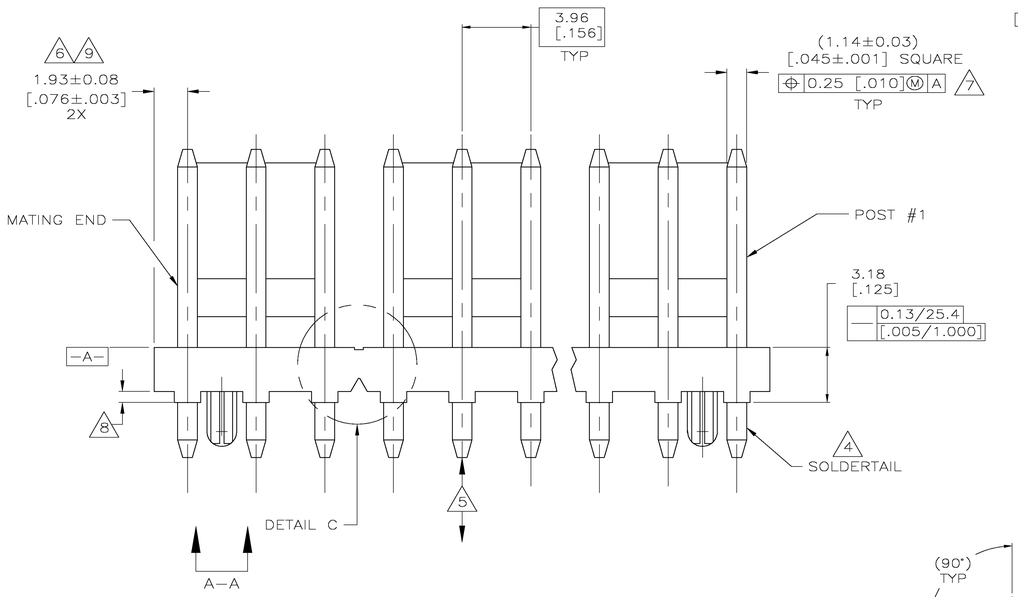

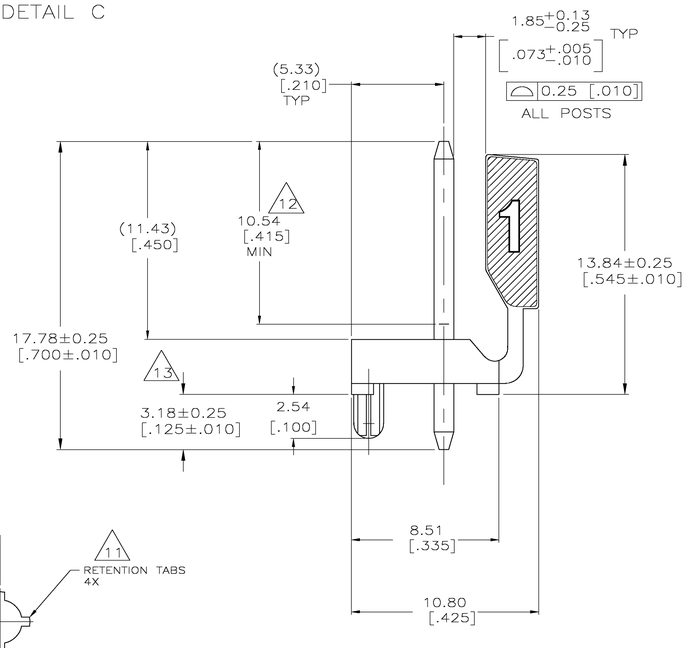

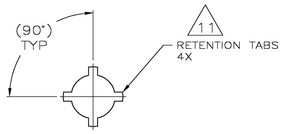

VIEW A-A
SCALE 16:1

1. MATERIAL
   HOUSING: THERMOPLASTIC POLYESTER, GLASS FILLED, UL94V-0
   POST: COPPER ALLOY
2. FINISH
   HOUSING: NATURAL
   POST: SEE NOTES 12, 13 & 17 FOR PLATING.
3. UL MARKING MAY NOT APPEAR ON THE 2 OR 3 POSITION SIZES. CSA MARKING MAY NOT APPEAR ON THE 2 POSITION SIZE.
4. POST SOLDERTAILS COMPLY WITH TYCO SOLDERABILITY SPECIFICATION 109-11-2.
5. POST WITHSTANDS 13.34 NEWTONS (3 LBS) MINIMUM AXIAL FORCE IN EITHER DIRECTION WITHOUT DISLODGING.
6. APPLIES AT -A-
7. APPLIES WHEN THE HEADER IS STRAIGHT.
8. PLASTIC PROJECTIONS PERMITTED IN THIS ZONE.
9. COORDINATE DIMENSIONS APPLIES FROM CENTER OF THE ACTUAL FEATURE.
10. SOLDER SIDE OF BOARD IS SHOWN.
11. THE RETENTION TABS PROVIDE A ONE-TIME INTERFERENCE FIT IN THE 1.63 [.064] DIAMETER BOARD HOLES FOR HEADER ASSEMBLY RETENTION DURING SOLDERING. FOUR TABS PER PEG, TWO PEGS PER HEADER ASSEMBLY (ONE PEG ONLY FOR 2 POSITION SIZE).
12. PLATING: GOLD PLATE AREA 0.00076 [.000030] MIN., ALL SIDES OVER NICKEL UNDERPLATE, 0.00127 [.000050] MINIMUM ALL SIDES AND ENTIRE LENGTH OF POST.
13. PLATING: BRIGHT TIN-LEAD (93/7) PLATE AREA, 0.00381-0.00889 [.000150-.000350] THICK, ALL FOUR SIDES, OVER, 3.18 [.125] MINIMUM.
14. DIMENSIONS IN BRACKETS ARE IN INCHES.
15. ALL POSITION SIZES HAVE THE BACK WALL NOTCHED ON BOTH ENDS AS SHOWN. THE 2 THRU 5 POSITION SIZES HAVE SOLID BACK WALLS. POSITION SIZES 6 AND ABOVE HAVE AN INTERRUPTED BACK WALLS AT VARIOUS LOCATIONS (SEE TABLE FOR INTERRUPTION(S) LOCATIONS).
16. EDGE OF POLARIZING LOCK WALL TO BE IN LINE WITH CENTERLINE OF ADJACENT POST WITHIN ±0.13 [.005].
17. PLATING: MATTE TIN PLATE AREA, 0.00381-0.00889 [.000150-.000350] THICK, ALL FOUR SIDES, OVER, 3.18 [.125] MINIMUM.

BACK WALL INTERRUPTIONS BETWEEN POSTS	(L)	NO.OF POSN	ASSEMBLY
4&5 7&8 11&12 14&15	71.20 [2.803]	18	4-644631-8
4&5 7&8 10&11 13&14	67.23 [2.647]	17	4-644631-7
4&5 8&9 12&13	63.27 [2.491]	16	4-644631-6
4&5 8&9 11&12	59.31 [2.335]	15	4-644631-5
4&5 7&8 10&11	55.35 [2.179]	14	4-644631-4
4&5 7&8 10&11	51.38 [2.023]	13	4-644631-3
4&5 8&9	47.42 [1.867]	12	4-644631-2
4&5 7&8	43.46 [1.711]	11	4-644631-1
3&4 7&8	39.50 [1.555]	10	4-644631-0
3&4 6&7	35.53 [1.399]	9	3-644631-9
4&5	31.57 [1.243]	8	3-644631-8
4&5	27.61 [1.087]	7	3-644631-7
3&4	23.65 [.931]	6	3-644631-6
NONE	19.69 [.775]	5	3-644631-5
NONE	15.72 [.619]	4	3-644631-4
NONE	11.76 [.463]	3	3-644631-3
NONE	7.80 [.307]	2	3-644631-2
4&5 7&8 11&12 14&15	71.20 [2.803]	18	1-644631-8
4&5 7&8 10&11 13&14	67.23 [2.647]	17	1-644631-7
4&5 8&9 12&13	63.27 [2.491]	16	1-644631-6
4&5 8&9 11&12	59.31 [2.335]	15	1-644631-5
4&5 7&8 10&11	55.35 [2.179]	14	1-644631-4
4&5 7&8 10&11	51.38 [2.023]	13	1-644631-3
4&5 8&9	47.42 [1.867]	12	1-644631-2
4&5 7&8	43.46 [1.711]	11	1-644631-1
3&4 7&8	39.50 [1.555]	10	1-644631-0
3&4 6&7	35.53 [1.399]	9	644631-9
4&5	31.57 [1.243]	8	644631-8
4&5	27.61 [1.087]	7	644631-7
3&4	23.65 [.931]	6	644631-6
NONE	19.69 [.775]	5	644631-5
NONE	15.72 [.619]	4	644631-4
NONE	11.76 [.463]	3	644631-3
NONE	7.80 [.307]	2	644631-2

METRIC

THIS DRAWING IS A CONTROLLED DOCUMENT.
DIMENSIONS: mm [INCHES]
TOLERANCES UNLESS OTHERWISE SPECIFIED: 0 PLC ±, 1 PLC ±, 2 PLC ± 0.13 [.005], 3 PLC ±, 4 PLC ±, ANGLES ±
MATERIAL 1 FINISH 2

DWN S. HOOVER 25-FEB-2005
CHK D. BOSSI 25-FEB-2005
APVD D. BOSSI 25-FEB-2005
PRODUCT SPEC
APPLICATION SPEC
WEIGHT

Tyco Electronics Corporation
Harrisburg, Pa 17105-3608

NAME: MTA-,156 HEADER ASSEMBLY, STRAIGHT, STRAIGHT .045 SQUARE POST, .000030 GOLD PLATED, WITH RETENTION PEGS

SIZE	CAGE CODE	DRAWING NO	RESTRICTED TO
A0	00779	C-644631	—

CUSTOMER DRAWING SCALE 1:1 SHEET 1 OF 1 REV E